Model DA Actuator
Product Manual

Thank you very much for choosing the Yoshitake's product. To ensure the correct and safe use of the product, please read this manual before use. This manual shall be kept with care for future references.

The symbols used in this manual have the following meanings.

⚠ Warning	This symbol indicates a potentially hazardous situation that, if not avoided, could result in death or serious injury.
⚠ Caution	This symbol indicates a hazardous situation that, if not avoided, may result in minor or moderate injury or may result in only property damage.

Contents

1. Specifications 1
2. Transportation and storage 2
   2.1 Transportation 2
   2.2 Storage 2
3. Mounting on valves 2
   3.1 Mounting procedure on ball valves 2
   3.2 Mounting procedure on butterfly valves 5
4. Electrical wiring 6
5. Limit adjustment 8
   5.1. Adjustment of limit cam and limit switch 8
      5.1.1. Fully close position setting 8
      5.1.2. Fully open position setting 9
      5.1.3. Fully open/close auxiliary limit switch setting 9
   5.2. Mechanical limit screw adjustment 9
      5.2.1. Adjustment of closing limit bolt 9
6. Maintenance and inspection 10
   6.1. Troubleshooting 10
   6.2. Daily inspection 10
   6.3. Periodic inspection 10
7. Dimensions and weights 11
8. Wiring diagram 12
9. Correspondence table 13

Warranty Information

YOSHITAKE

■EPDT-375b■

1. Specifications

Model	DA10, 20	DA35, 50, 80, 100, 200-□□□		
Voltage	AC85-265V AC/DC24V	AC100V (□□□:100)	AC200V (□□□:200)	AC220V (□□□:220)
Frequency	50/60Hz			
Ambient temperature	-25～70°C			
Operation	ON-OFF			
Operation angle	90°bi-directional rotation			
Feedback signal	Fully open/closed position feedback (Contact capacity: 5A at AC250V)			
Working time	Short-time duty 15 min			
Insulation class	Class F			
Motor protection	Built-in thermal protector Built-in torque protector			
Manual operation	Possible			
Protection	IP67			
Body material	Aluminum alloy			
Mounting standard	ISO5211			
General parameters	Refer to the parameter table			

Parameter table of electric actuator

Model	Torque (N·m)	Travel time (sec)		Power (W)	Consumption current (A)			Mounting standard
		50Hz	60Hz		AC85-265V (AC/DC24V)	AC100V	AC200V AC220V	ISO 5211
DA10	10	13	13	5	0.05-0.08 (0.75)			F03/F04 /F05
DA20	20	12	12	8				
DA35-□□□	35	11	9	10		0.36	0.21	F03/F05 /F07
DA50-□□□	50	15	13	10				
DA80-□□□	80	22	18	10				
DA100-□□□	100	19	16	40		0.93	0.42	F05/F07 /F10/F12
DA200-□□□	200	39	33	40				

⚠ Caution

(1) Confirm that the indications on the label on the product correspond with the specifications of the ordered product model before use.
*If they are different, do not use the product and contact us.

(2) This actuator is for ON-OFF application only. Avoid other uses.
*The product performance might not be provided fully, or malfunction might be caused.

(3) The actuator is at the closed position at the time of shipment from the factory. (indicator: **]-[**)

2. Transportation and storage

2.1 Transportation

⚠ Caution

(1) When handling or installing the product, if it needs to be hoisted with ropes or hooks, do not directly hang it on the hand wheel.
*Hanging it on the hand wheel may result in falling and damage

(2) If the electric actuator has been installed on the valve, for large diameter valves, when hoisting is required, do not directly use ropes or hooks to hoist the electric actuator.
*Attaching the ropes or hooks directly may damage the actuator.

2.2 Storage

⚠ Caution

(1) The temperature of transportation and storage is -30°C to +40°C.
*The product lifetime will be shortened if the storage temperature exceeds 40°C.

(2) Store the product at environment without humidity or corrosive gas.

3. Mounting on valves

This product can be mounted on BLV-2SF ball valve and BFV-1S butterfly valve. Mounting parts (bracket set) designated by Yoshitake are necessary for mounting. Be sure that the correct combination of actuator, valve and mounting parts set are prepared, referring to the correspondence table in the Section 9.

⚠ Caution

(1) When mounting this product on a valve, use a valve and mounting parts (bracket set) specified by Yoshitake.
*The product performance might not be provided fully, or malfunction might be caused.

3.1 Mounting procedure on ball valves

(1) If the ball valve is piped, detach it from the pipe.

(2) Dismantle the snap ring and the stopper of the valve.

(3) Close the valve by the handle.

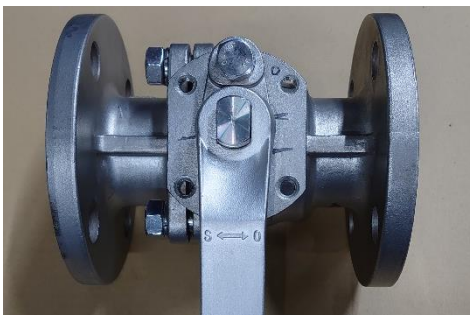

(4) The handle, snap ring and stopper are not used in mounting.

(5) Fix the ball valve firmly with a vice. Be careful not to damage the sealing surfaces.

(6) Place the bracket with its opening on the bottom side, aligning 4 holes with the female threaded parts of the valve.

(7) Fit the upper connector and the lower connecter. Install them on the valve stem.

(8) Mount and fix the actuator using hexagon socket head cap bolts and wave washers (8 points).
The actuator can be directed in any direction. Consider easiness of wire connection and visibility of the label.

(9) Open and close the actuator. Adjust if the valve opening is out of alignment (refer to Section 5).

3.2 Mounting procedure on butterfly valves

(1) If the butterfly valve is piped, detach it from the pipe.

(2) Fix the butterfly valve firmly with a vice.
At that time, be careful not to damage the sealing surface.

(3) Close the butterfly valve with the lever handle.

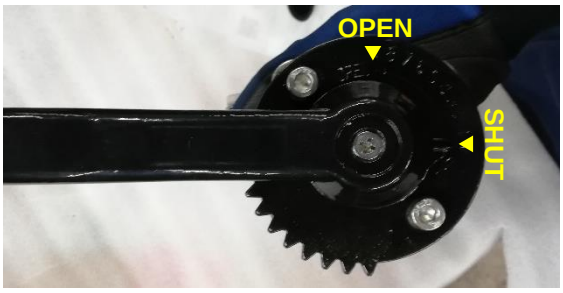

(4) Detach the flat head screw and the hexagon socket head cap bolts.
Dismount the lever handle and the plate.

(5) The lever handle, plate (and bolts and nuts for fixing them) are not be used in mounting.

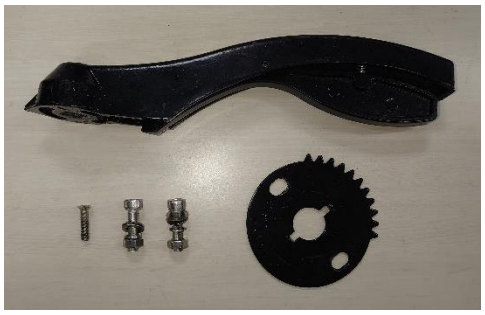

(6) Insert the lower connector and then the upper connector. Place the bracket with its opening on the bottom side.

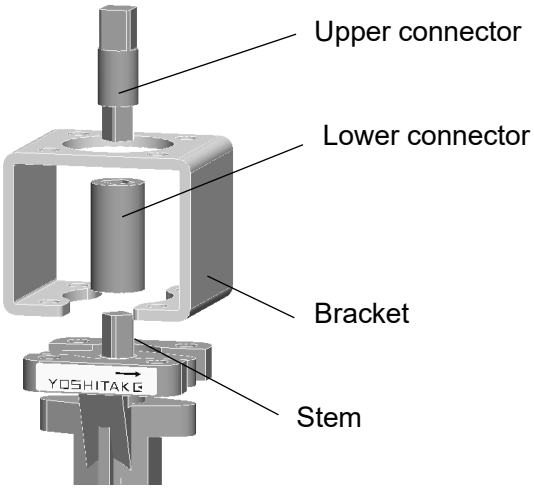

(7) Mount and fix the actuator using hexagon socket head cap bolts, spring washers and hexagon nuts. (The shorter hexagon socket head cap bolts are for the actuator side, and the longer are for the valve side.)
The actuator can be directed in any direction. Consider easiness of wire connection and visibility of the label.

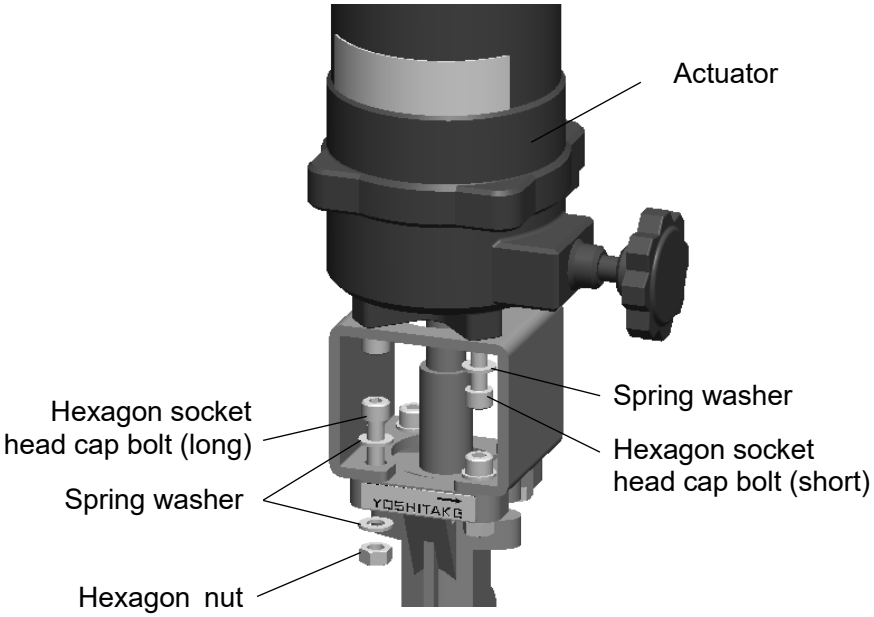

4. Electrical wiring

(1) Loosen the screws on the protective cover and remove the protective cover.
*For DA10 and DA 20, please use a hexagonal wrench with width across flat 3mm.
*For DA35 to DA200, please use a hexagonal wrench with width across flat 4mm.

(2) Loosen the cable gland nut and pull out the rubber plug. Thread the cable from the cable gland and connect to the terminal block. Wire according to the wiring diagram (refer to Section 8).

(3) Wire the ground terminal. It is located away from the terminal block.

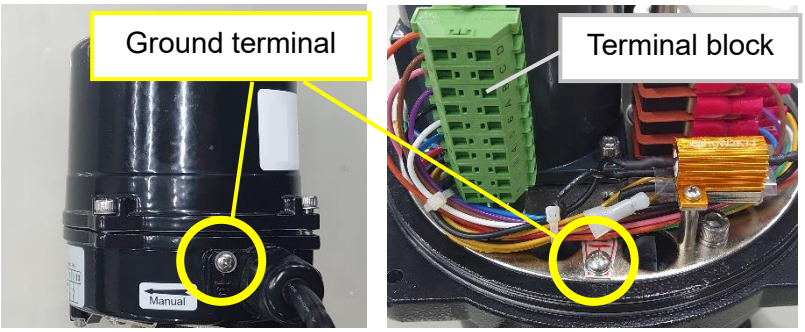

DA10, DA20 DA35～DA200

(4) Tighten the nut of the cable gland after connecting the cable.

(5) Be sure that the wiring is correct before turning on the electricity.

(6) Conduct a test run of the actuator and confirm that the acting direction, limit device and other functions operate normally.

(7) After checking that all the functions are normal, install the protection cover and tighten the screws of the upper cover.

In order to ensure the waterproof of the electric actuator, please pay attention to the diameter when selecting the wiring cables.

For DA10 to DA80, please use cable with diameter 6 – 12mm.
For DA100 and DA200, please use cable with diameter 10 – 14mm.

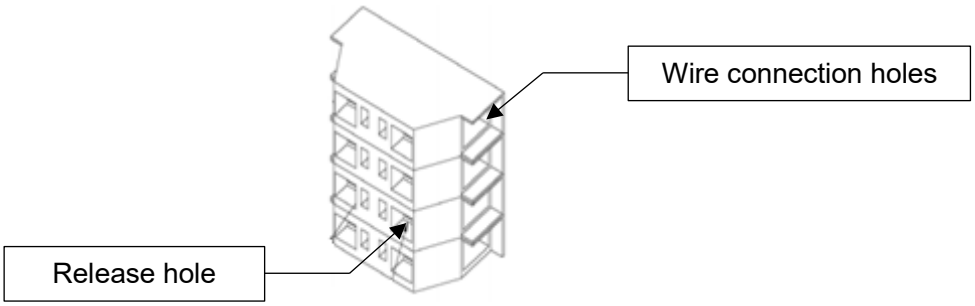

Structure of terminal block (example)

⚠ Warning

(1) Be sure to connect the ground terminal.
*Use without wiring the ground terminal may cause electric shock.

⚠ Caution

(1) Do not apply power supply until correct wiring is confirmed.
*Short circuit and wrong wiring will damage equipment.
(2) Pay attention to the ON/OFF indicator. Do not operate exceeding full open and full close positions.
*The actuator mechanism will be damaged.

5. Limit adjustment

⚠ Caution

(1) All the settings of the actuator have been completed before shipment from the factory and do not require re-adjustment. If you need re-adjust it, ask experts to do it.
*Wrong adjustment will cause malfunction of the actuator.

5.1. Adjustment of limit cam and limit switch

The actuator is equipped with 4 limit switches (SLO1 & SLC1, SLO2 & SLC2). SLO1 & SLC1 are on and off limit switches, while SLO2 and SLC2 are on and off auxiliary limit switches for signal feedback. Looking up from the substrate (as shown in the figure), the first one is the opening cam, the second one is the closing cam, the third one is the opening auxiliary limit cam, and the fourth one is the closing auxiliary limit cam (refer to the drawing below).

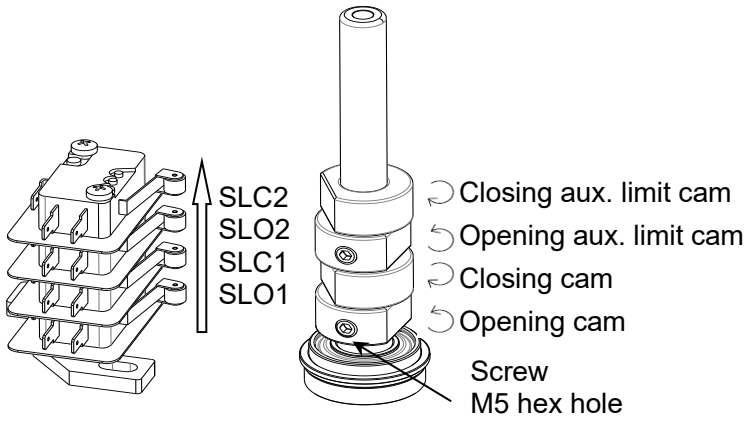

Structure of limit mechanism

＜SLO1 Opening cam＞
Clockwise: increase the opening angle to full opening
Counterclockwise: reduce the opening angle

＜SLC1 Closing cam＞
Clockwise: reduce the closing angle
Counterclockwise: increase the closing angle to full closing

Follow the steps below if the re-adjustment is required.

5.1.1. Fully close position setting

(1) Switch off the power.
(2) Use manual operation device to turn the valve to the fully close position.
(3) Open the upper cover and use a 2.5mm socket head wrench to loosen the M5 set screw on the SLC1.
(4) Turn the SLC1 cam counterclockwise until it touches the microswitch, so that the microswitch will act.
(5) Adjust the SLC1 cam slowly in clockwise direction until the micro switch acts with a “click.”
(6) Lock the M5 fixing screw on the SLC1 cam and connect power supply to confirm whether the operation position is correct. If the required positioning is not reached, please reset according to the above steps.
(7) After setting, confirm again whether M5 fixing screw on SLC1 cam is locked.

5.1.2. Fully open position setting

(1) Switch off the power.
(2) Use manual operation device to turn the valve to the fully open position.
(3) Open the upper cover and use a 2.5mm socket head wrench to loosen the M5 set screw on the SLO1 cam.
(4) Turn the SLO1 cam clockwise until it touches the microswitch, so that the microswitch will act.
(5) Adjust the SLO1 cam slowly counterclockwise until the microswitch acts with a “click.”
(6) Lock the M5 fixing screw on SLO1 cam and connect power supply to confirm whether the operation position is correct. If the required position is not reached, please reset according to the above steps.
(7) After setting, confirm again whether M5 fixing screw on SLO1 cam is locked.

5.1.3. Fully open/close auxiliary limit switch setting

The adjustment steps of fully open/fully close auxiliary limit switch (SLO2 & SLC2) are the same as SLO1 and SLC1 respectively.

5.2. Mechanical limit screw adjustment

DA100 and DA200 are equipped with mechanical limit bolt, but usually it does not require adjustment when installing on valves. Please follow the steps below when adjustment is necessary.

5.2.1. Adjustment of closing limit bolt

(Apply the words in parentheses when adjusting opening limit bolt)

(1) Switch off the power.
(2) Loosen the **closing (opening)** limit locknut and loosen the **closing (opening)** limit bolt for several turns.
(3) Manually operate the actuator to the required limit position.
(4) Tighten the **closing (opening)** limit bolt to the end, and then loosen one circle.
(5) Lock the **closing (opening)** limit lock nut.
(6) Confirm whether the fully **closing (opening)** position can be reached during the electric operation, otherwise re-adjust according to the above steps.

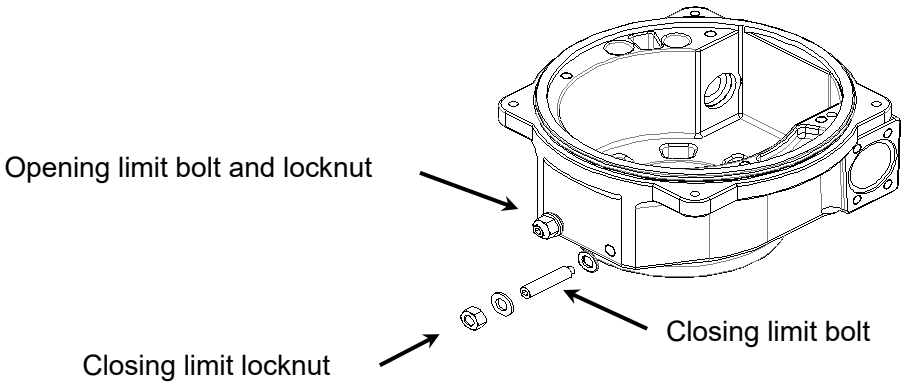

Mechanical limit reference drawing (DA100, DA200)

6. Maintenance and inspection

6.1. Troubleshooting

Trouble	Cause	Remedy
The actuator does not operate.	No power	Check the power supply voltage.
	No input signal or wrong input value	Check the input signal.
	Disconnection or separation from the terminal block	Connect the electric wire firmly.
	Thermal protector of the motor acts	Wait for the motor cools.
	Limit switch is out of alignment	Adjust the cam of travel switch.
	Motor capacitor is damaged	Replace the product.
	Motor coil is damaged	Replace the product.
Actuator does not stop.	Unstable input signal	Check the input signal
No feedback signal	The opening signal line is disconnected or poorly contacted	Check whether the wiring mode conforms to the wiring diagram.

*Note: if there is condensation inside the actuator when it is not powered after installation, please turn on the power supply to remove the water vapor from the heater before operation.

6.2. Daily inspection

(1 time/day)

- Damage, looseness or distortion of parts
- Loose connection of the actuator, bracket (mounting parts) and valve
- Abnormal noise during the actuator's operation
- Damage, looseness or distortion of the cables and wires

6.3. Periodic inspection

(1 time/year. Check for followings as well as daily inspection items.)

- Check whether the full stroke operation of local manual operation is flexible.
- Whether the control and feedback signals are accurate.

*DA10 to DA50 can be opened and closed manually with the operation shaft at the bottom of the actuator (see the figures below), and DA80 to DA200 with the hand wheel.

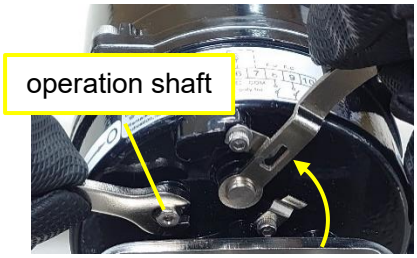

Operate the clutch in the direction of the arrow and open and close it with the wrench provided.

DA10, DA20

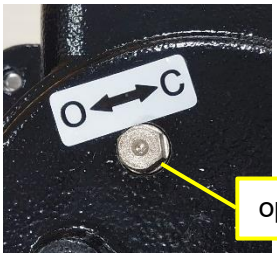

Use a wrench to open and close.
*Wrench is not included.

DA35, DA50

7. Dimensions and weights

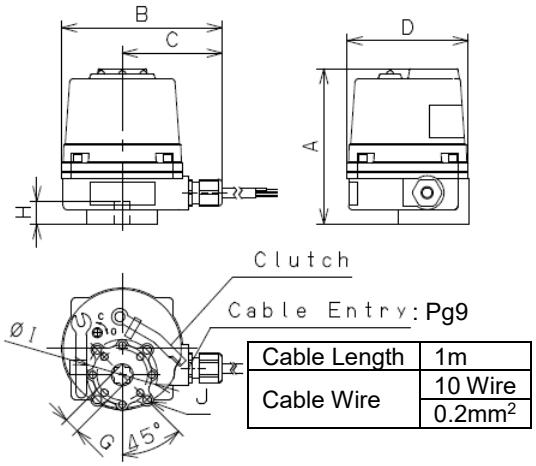

Cable Length	1m
Cable Wire	10 Wire
	0.2mm^2

DA10, DA20

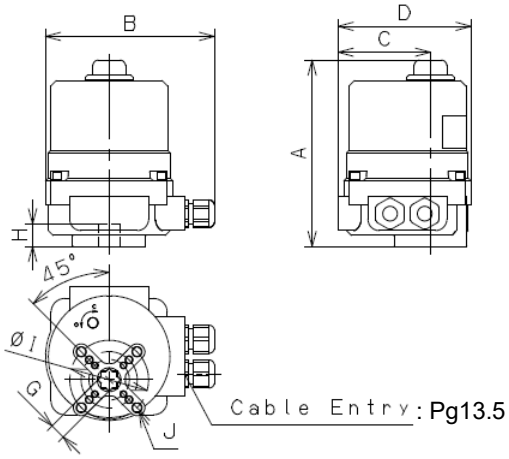

DA35, DA50

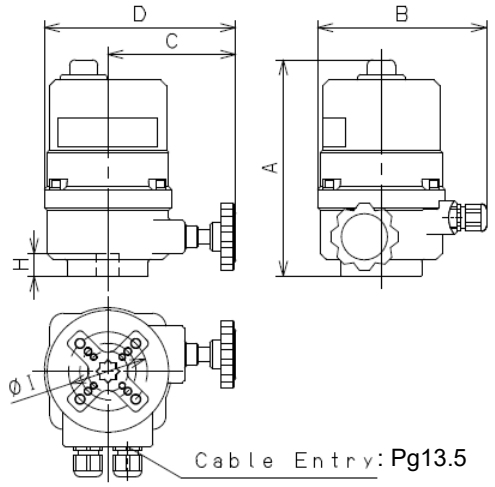

DA80

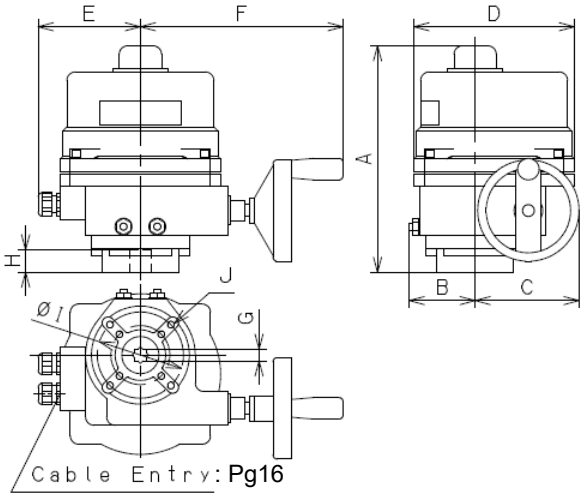

DA100, DA200

Actuator dimensions table (mm)

Model	A	B	C	D	E	F	G	H	φI	J	Weight (kg)
DA10	110	111	71	87	-	-	11	16	36 42 50	4-M5 4-M5 4-M6	1
DA20											
DA35-□□□	165	150	82	118	-	-	14	20	36 50 70	4-M5 4-M6 4-M8	3
DA50-□□□											
DA80-□□□	192		113.5	170	-	-					3.6
DA100-□□□	268	77	123	216	121	240		35	70 102	4-M8 4-M10	11
DA200-□□□							17				

8. Wiring diagram

DA10, 20 Wiring diagram

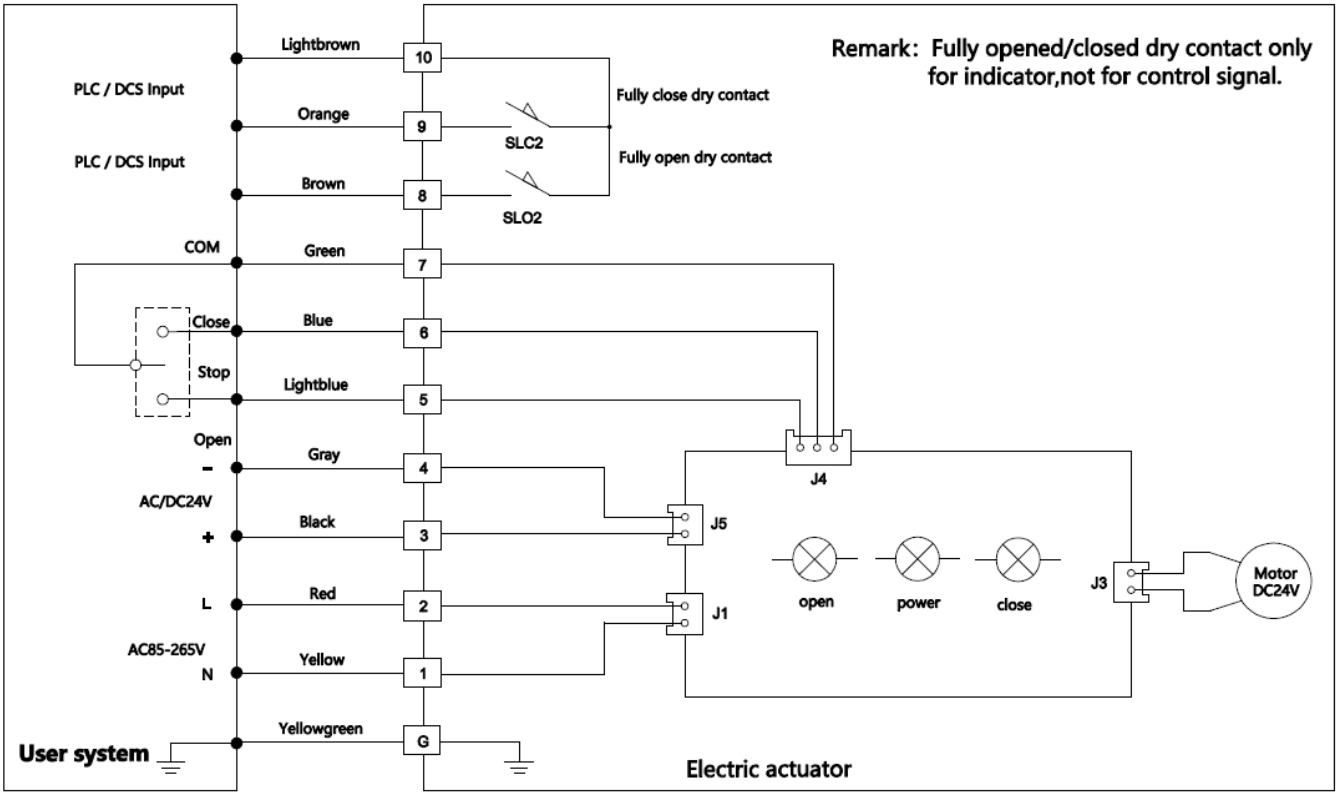

*Be sure to wire the protective earth terminal G.

DA35～DA200 Wiring diagram

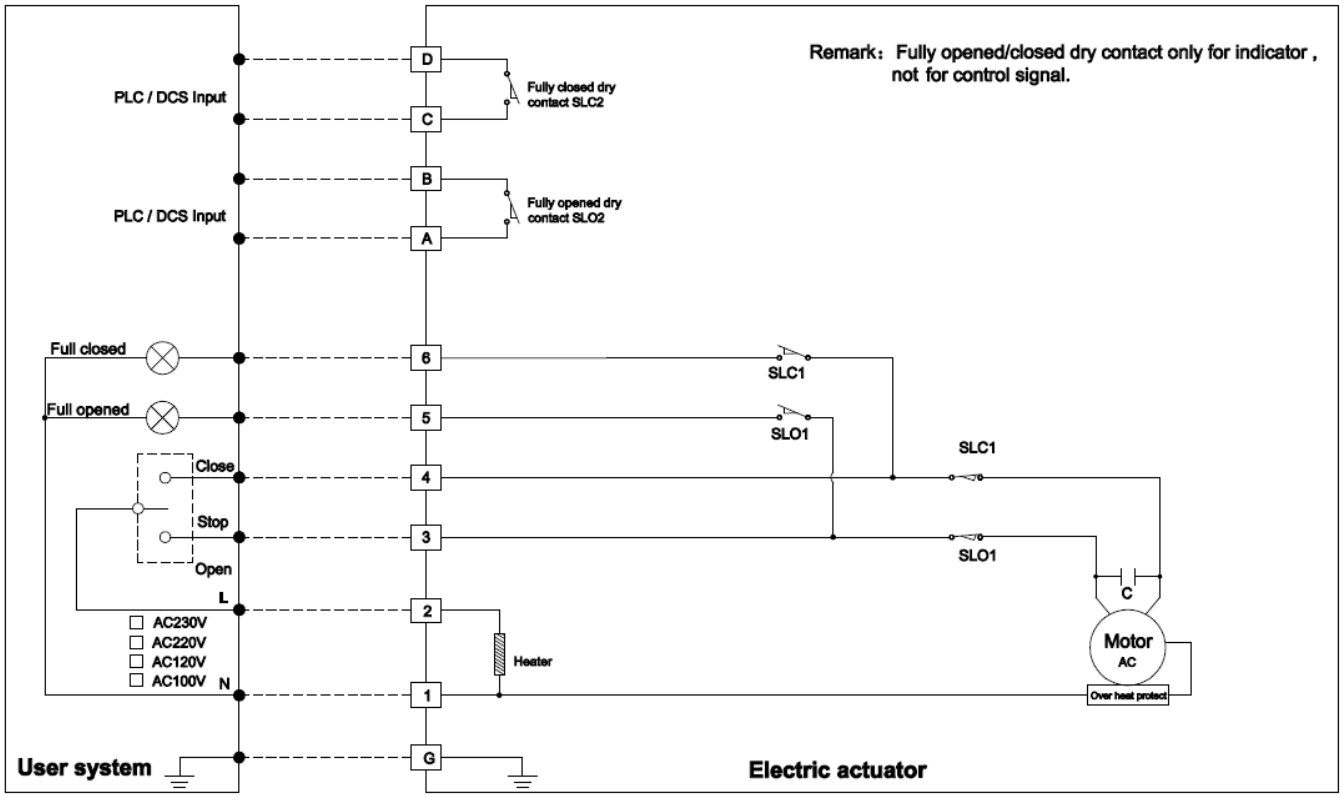

*Be sure to wire the protective earth terminal G.

9. Correspondence table

Ball valve BLV-2SF

Valve nominal size	Actuator	Bracket set
15A	DA10	Bracket set (KBLV, DBLV:15/20A)
20A	DA10	Bracket set (KBLV, DBLV:15/20A)
25A	DA20	Bracket set (KBLV, DBLV:25A)
32A	DA35-□□□	Bracket set (KBLV, DBLV:32A)
40A	DA35-□□□	Bracket set (KBLV, DBLV:40/50A)
50A	DA50-□□□	Bracket set (KBLV, DBLV:40/50A)
65A	DA100-□□□	Bracket set (DBLV:65A)
80A	DA200-□□□	Bracket set (DBLV:80/100A)
100A	DA200-□□□	Bracket set (DBLV:80/100A)

Butterfly Valve BFV-1S

Valve nominal size	Actuator	Bracket set
50A	DA50-□□□	Bracket set (DBFV:50-100A)
65A	DA50-□□□	Bracket set (DBFV:50-100A)
80A	DA50-□□□	Bracket set (DBFV:50-100A)
100A	DA80-□□□	Bracket set (DBFV:50-100A)
125A	DA200-□□□	Bracket set (DBFV:125/150A)
150A	DA200-□□□	Bracket set (DBFV:125/150A)

Warranty Information

1. Limited warranty

   This product has been manufactured using highly-advanced techniques and subjected to strict quality control. Please be sure to use the product in accordance with instructions on the manual and the label attached to it.

   Yoshitake warrants the product to be free from any defects in material and workmanship under normal usage for a period of one year from the date of receipt by the original user, but no longer than 24 months from the date of shipment from Yoshitake's factory.

2. Parts supply after product discontinuation

   This product may be subject to discontinuation or change for improvement without any prior notice. After the discontinuation of the product, Yoshitake supplies the repair parts for 5 years otherwise individually agreed.

3. This warranty does not cover the damage due to any of below:

   (1) Valve seat leakage or malfunction caused by foreign substances inside piping.
   (2) Improper handling or misuse.
   (3) Improper supply conditions such as abnormal water pressure/quality.
   (4) Water scale or freezing.
   (5) Trouble with power/air supply.
   (6) Any alteration made by other than Yoshitake.
   (7) Use under severe conditions deviating from the design specifications (e.g. in case of corrosion due to outdoor use).
   (8) Fire, flood, earthquake, thunder and other natural disasters.
   (9) Consumable parts such as O-ring, gasket, diaphragm and etc.

   Yoshitake is not liable for any damage or loss caused by malfunction or defect of the product.

YOSHITAKE