Model KA Actuator
Product Manual

Thank you very much for choosing the Yoshitake's product. To ensure the correct and safe use of the product, please read this manual before use. This manual shall be kept with care for future references.

The symbols used in this manual have the following meanings.

⚠ Warning	This symbol indicates a potentially hazardous situation that, if not avoided, could result in death or serious injury.
⚠ Caution	This symbol indicates a hazardous situation that, if not avoided, may result in minor or moderate injury or may result in only property damage.

Contents

1. Specifications 1
2. Dimensions and main parts 2
3. Operation 3
4. Mounting on valves 3
   4.1 Mounting procedure on ball valves 3
   4.2 Mounting procedure on butterfly valves 6
   4.3 How to change the direction of the indicator 7
5. Adjustment of opening position 8
   5.1. Cautions on adjustment of opening position 8
   5.2. Adjustment of valve opening position 8
6. Installation 9
   6.1. Precaution for installation 9
7. Operation 9
   7.1. Precaution for using the product 9
8. Maintenance and inspection 9
   8.1. Warning and precaution for maintenance and inspection 9
   8.2. Periodic Inspection 10
   8.3. Troubleshooting 10
9. Correspondence table 10
   Warranty Information

YOSHITAKE

■EPDT-372a■

1. Specifications

Model	KA12	KA20	KA35	KA50	KA75	KA110	KA160	KA255
Operating fluid	Air, nitrogen gas							
Operating pressure range	0.25 MPa to 0.8 MPa							
Ambient temperature	-20 to +80°C							
Operation	Double action							
Operation angle	90°±5							
Body material	Aluminum alloy							
Mounting standard	Valve mounting: ISO5211, Ancillaries: NAMUR							
Output torque	According to the output torque table							

Output torque table (unit: N m)

Model	Operating air pressure (MPa)								
	0.25	0.3	0.4	0.45	0.5	0.55	0.6	0.7	0.8
KA12	6	7	10	11	12	13	14	17	19
KA20	10	12	16	18	20	22	24	28	32
KA35	18	22	29	33	36	40	44	51	58
KA50	25	30	40	45	50	55	60	70	80
KA75	39	47	63	70	78	86	94	110	125
KA110	56	68	90	102	113	124	135	158	181
KA160	83	99	132	149	165	182	198	231	264
KA255	125	150	200	226	251	276	301	351	401

*When mounting on Yoshitake's valves, set the operating pressure within the range of 0.4 to 0.8MPa.

⚠ Caution

Confirm that the indications on the product correspond with the specifications of the ordered product model before use.
*If they are different, do not use the product and contact us.

The actuator is in the closed position when shipped from factory.

2. Dimensions and main parts

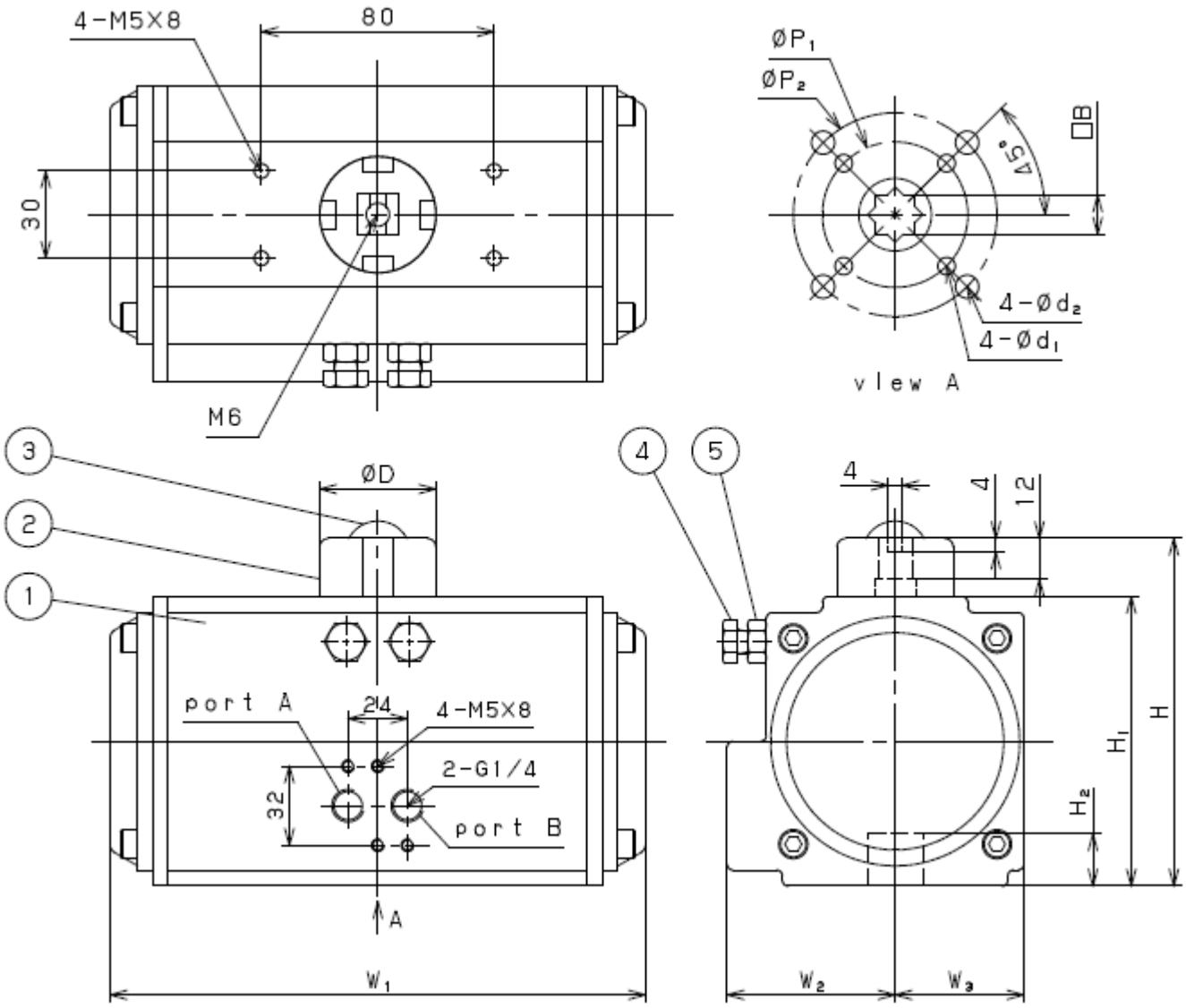

No.	Part name	Q'ty
1	Body	1
2	Indicator	1
3	Indicator bolt	1
4	Adjuster bolt	2
5	Lock nut	2

(mm)

Model	W_1	W_2	W_3	H	H_1	H_2	D	B	d_1	d_2	P_1	P_2	Weight (kg)
KA12	122	36.5	28.5	80	60	14	40	11	M5×8	M6×10	36	50	1
KA20	149	41.5	30	92	72	14	40	11	M5×8	M6×10	36	50	1.4
KA35	168	47	36	108	88	18	40	14	M6×10	M8×13	50	70	2
KA50	184	53	42	119.5	99.5	18	40	14	M6×10	M8×13	50	70	2.7
KA75	210	57	46	129	109	21	40	17	M6×10	M8×13	50	70	3.1
KA110	262	58.5	50	136.5	116.5	21	40	17	M6×10	M8×13	50	70	4.6
KA160	268	64	57.5	153	133	26	40	22	M8×13	M10×16	70	102	6.3
KA255	301	74.5	67.5	175	155	26	55	22	M8×13	M10×16	70	102	8.9

3. Operation

When the operating air is supplied into the port A, the pistons move outward discharging air from the port B, and the drive pinion rotates counterclockwise (0° to 90°).

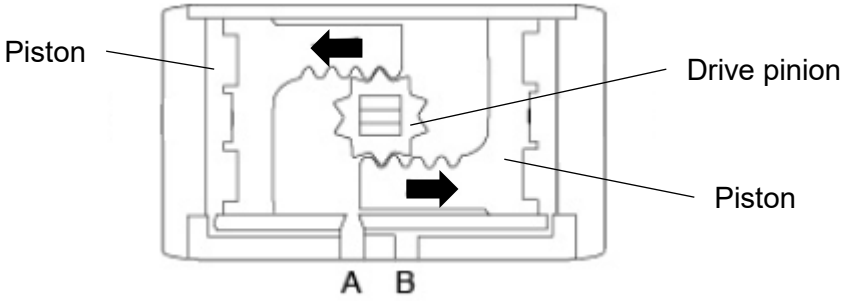

When the operating air is supplied into the port B, the pistons move inward discharging air from the port A, and the drive pinion rotates clockwise (90° to 0°).

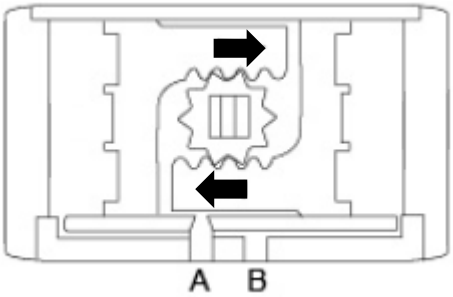

4. Mounting on valves

This product can be mounted on BLV-2SF ball valve and BFV-1S butterfly valve. Mounting parts (bracket set/insert set) designated by Yoshitake are necessary for mounting. Be sure that the correct combination of actuator, valve and mounting parts set are prepared, referring to the correspondence table in the Section 9.

⚠ Caution

(1) When mounting this product on a valve, use a valve and mounting parts (bracket set) specified by Yoshitake.
*The product performance might not be provided fully, or malfunction might be caused.

4.1 Mounting procedure on ball valves

(1) If the ball valve is piped, detach it from the pipe.

(2) Dismantle the snap ring and the stopper of the valve.

(3) Close the ball valve by the handle.

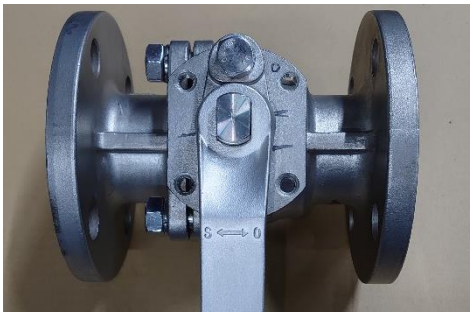

(4) The handle, snap ring and stopper are not used in mounting.

(5) Fix the ball valve firmly with a vice. Be careful not to damage the sealing surfaces.

(6) Place the bracket with its opening on the bottom side, aligning 4 holes with the female threaded parts of the valve.

(7) Fit the upper connector and the lower connecter. Install them on the valve stem.

(8) Mount and fix the actuator using hexagon socket head cap bolts and spring washers (8 points).
The actuator can be directed in any direction. Consider visibility of the label and easiness of pneumatic line connection.

(9) Open and close the actuator. Adjust if the valve opening is out of alignment (refer to Section 5).

4.2 Mounting procedure on butterfly valves

(1) If the butterfly valve is piped, detach it from the pipe.

(2) Fix the butterfly valve firmly with a vice.
At that time, be careful not to damage the sealing surface.

(3) Close the butterfly valve with the lever handle.

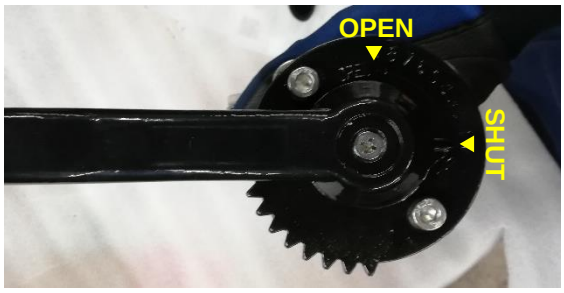

(4) Detach the flat head screw and the hexagon socket head cap bolts.
Dismount the lever handle and the plate.

(5) The lever handle, plate (and bolts and nuts for fixing them) are not be used in mounting.

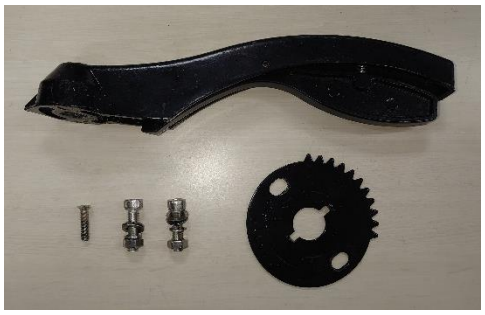

(6) Attach the insert on the stem.

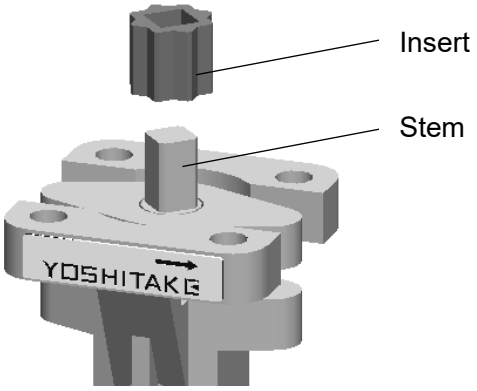

(7) Mount and fix the actuator using hexagon socket head cap bolts and spring washers (4 points).
The actuator can be directed in any direction. Consider visibility of the label and easiness of pneumatic line connection.

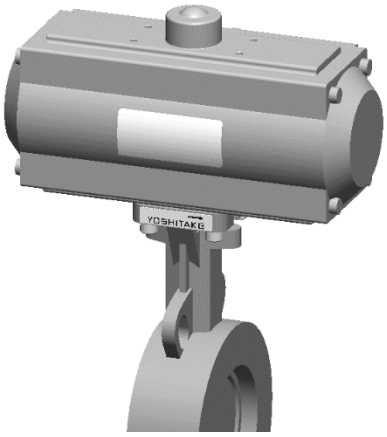

4.3 How to change the direction of the indicator

Depending on the installation position of the actuator, the indicator and the open/close status of the valve may not match. In such cases, detach the indicator bolt and change the direction of the indicator.

*Make sure that the open/close status of the actuator and the valve are the same.

*The open/close status of the actuator can be checked by the direction of the shaft when the indicator is detached.

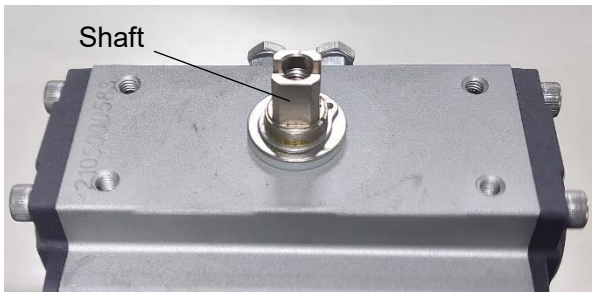

Actuator: open

Actuator: close

5. Adjustment of opening position

5.1. Cautions on adjustment of opening position

⚠ Caution

(1) The actuator is preset by factory and usually further adjustment is not required. If re-adjustment is necessary, it should be done by experts.
(2) Before adjustment, completely remove compressed air inside the actuator.
(3) When operating the actuator, be that there is no foreign substance inside the valve.
*Entangled foreign substance may cause defect or malfunction.

(4) Use a tool such as spanner when adjusting the adjuster bolts.

5.2. Adjustment of valve opening position

(Apply **the words in parentheses** when adjusting closing position)

(1) **Close (open)** the valve and remove compressed air inside the actuator.

(2) Loosen the lock nut on the **left (right)** and adjust the adjuster bolt on the **left (right)**.
*The rotary angle will get smaller when the adjuster bolt is tightened, and get larger when the adjuster bolt is loosened.

(3) Tighten the lock nut and supply operating air through the port **A (B)** to **open (close)** the valve.

(4) Check the valve opening. If misaligned, repeat from (1) to (3).

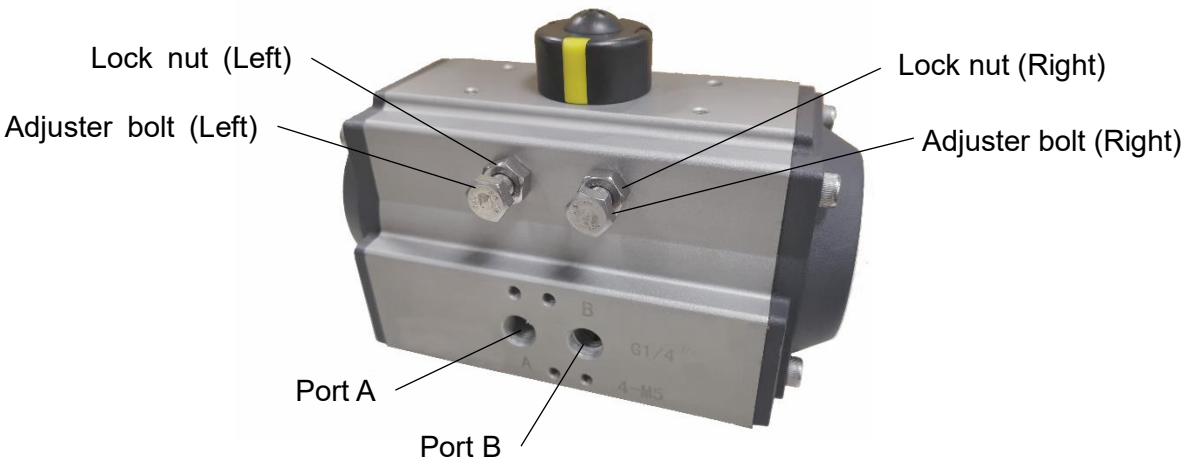

6. Installation

6.1. Precaution for installation

⚠ Caution

(1) When mounting the actuator on a valve, be sure that the actuator model name and operation air pressure are appropriate. Besides, check if the bolts are not loose.
(2) Connect operating air pipes securely so that it would not leak.
*If connection is not firm, fluid might leak by vibration.
(3) Connect air pipes and valves used to operate the actuator so that they are not subjected to excessive load, bending and vibration.
*They may cause malfunction or short lifetime of the product.
(4) Supply clean and dry compressed air not containing water, oil or foreign substances.
*Foreign substances will cause malfunction.
(5) Never place something on or step on the actuator.

(6) It is recommended that a regulator is installed on the operating air piping for the actuator.
(7) This product can be installed outdoor.

7. Operation

7.1. Precaution for using the product

⚠ Caution

(1) Supply clean and dry compressed air not containing water, oil or foreign substances.
*Foreign substances will cause malfunction.
(2) Set the regulator at appropriate pressure.
*Be sure to use it at 0.8MPa or lower. Higher pressure will cause malfunction.
(3) Use only air or nitrogen gas as operating fluid.
*Other fluids may cause malfunction.

8. Maintenance and inspection

8.1. Warning and precaution for maintenance and inspection

⚠ Warning

(1) Do not disassemble the actuator unless it is necessary.
*It may prevent the product from functioning properly.
(2) Conduct periodic inspection to maintain functions and performance of the product.
*General users should ask experts (facility management/engineering companies, etc.) to perform periodic inspection.

⚠ Caution

(1) After leaving the product not operated for a long period, perform inspection before resuming operation.

(2) The actuator is lubricated at the factory and does not require further lubrication.

8.2. Periodic Inspection

Perform an inspection regularly depending on usage conditions and environment according to the following the points below, normally every 6 months.

Inspection items	Cause/Remedy
Misalignment of valve opening / closing position	Adjust the opening and closing positions if misaligned.
Leak from air pipe connections	Connect the air piping over again if there is a leak.
Slackness of bolts	Tighten the bolts.

8.3. Troubleshooting

Inspect following items if the actuator does not operate properly.

Trouble	Cause	Remedy
Valve does not operate.	Operating torque is not enough.	Check the operating torque. Check if the combination of actuator and valve is correct.
	Foreign substances are stuck.	Remove the foreign substance.
Rotary operation stops in the middle	Opening position of the valve is misaligned.	Adjust the opening / closing position.
	Foreign substances are stuck.	Remove the foreign substance.
There is abnormal noise.	The actuator is not mounted firmly.	Mount the actuator properly.
	The bolts are loose.	Tighten the bolts.

9. Correspondence table

Ball valve BLV-2SF

Valve nominal size	Actuator	Bracket
15A	KA12	Bracket set (KBLV, DBLV:15/20A)
20A	KA12	Bracket set (KBLV, DBLV:15/20A)
25A	KA20	Bracket set (KBLV, DBLV:25A)
32A	KA35	Bracket set (KBLV, DBLV:32A)
40A	KA35	Bracket set (KBLV, DBLV:40/50A)
50A	KA50	Bracket set (KBLV, DBLV:40/50A)
65A	KA110	Bracket set (KBLV:65A)
80A	KA160	Bracket set (KBLV:80/100A)
100A	KA255	Bracket set (KBLV:80/100A)

Butterfly valve BFV-1S

Valve nominal size	Actuator	Insert set
50A	KA50	Insert set (KBFV: 50/65A)
65A	KA50	Insert set (KBFV: 50/65A)
80A	KA75	Insert set (KBFV: 80/100A)
100A	KA110	Insert set (KBFV: 80/100A)
125A	KA160	Insert set (KBFV: 125/150A)
150A	KA255	Insert set (KBFV: 125/150A)

Warranty Information

1. Limited warranty

   This product has been manufactured using highly-advanced techniques and subjected to strict quality control. Please be sure to use the product in accordance with instructions on the manual and the label attached to it.

   Yoshitake warrants the product to be free from any defects in material and workmanship under normal usage for a period of one year from the date of receipt by the original user, but no longer than 24 months from the date of shipment from Yoshitake's factory.

2. Parts supply after product discontinuation

   This product may be subject to discontinuation or change for improvement without any prior notice. After the discontinuation of the product, Yoshitake supplies the repair parts for 5 years otherwise individually agreed.

3. This warranty does not cover the damage due to any of below:

   (1) Valve seat leakage or malfunction caused by foreign substances inside piping.
   (2) Improper handling or misuse.
   (3) Improper supply conditions such as abnormal water pressure/quality.
   (4) Water scale or freezing.
   (5) Trouble with power/air supply.
   (6) Any alteration made by other than Yoshitake.
   (7) Use under severe conditions deviating from the design specifications (e.g. in case of corrosion due to outdoor use).
   (8) Fire, flood, earthquake, thunder and other natural disasters.
   (9) Consumable parts such as O-ring, gasket, diaphragm and etc.

   Yoshitake is not liable for any damage or loss caused by malfunction or defect of the product.

YOSHITAKE