MODEL SY-17
STRAINER
PRODUCT MANUAL

Thank you very much for choosing the Yoshitake's product. To ensure the correct and safe use of the product, please read this manual before use. This manual shall be kept with care for future references.
The symbols used in this manual have the following meanings.

Warning	This symbol indicates a potentially hazardous situation that, if not avoided, could result in death or serious injury.
Caution	This symbol indicates a hazardous situation that, if not avoided, may result in minor or moderate injury or may result in only property damage.

Table of Contents

1. Specifications ····· 1
2. Dimensions ····· 1
3. Operation ····· 2
4. Nominal Size Selection
   4.1 Selection of nominal size ····· 2
   4.2 Selection of nominal pipe size ····· 2
   4.3 Pressure Loss Chart ····· 3
5. Maintenance
   5.1 Precaution for installation ····· 4
   5.2 Precaution for operation ····· 4
6. Disassembly, Cleaning and Reassembly
   6.1 Precaution for disassembly and inspection ····· 5
   6.2 Precaution for reassembly ····· 5
7. Piping Example ····· 5

Warranty Information

YOSHITAKE

■EPDT-056■

1. Specifications

Application		Steam, Air, Cold and hot water, Oil, Other non-dangerous fluids
Max. pressure		2.0 MPa
Max. temperature		100 °C (250 °C) *
Material	Body	Cast stainless steel
	Screen	Stainless steel
	Gasket	PTFE *
Screen	Perforations	φ2.5 – 4P
	Mesh	Standard 80 mesh
Connection		JIS Rc Screwed

* If the temperature is over 100 °C, another material is used for the gasket. Please contact us.

- Available with 20 to 100 mesh screens.

2. Dimensions

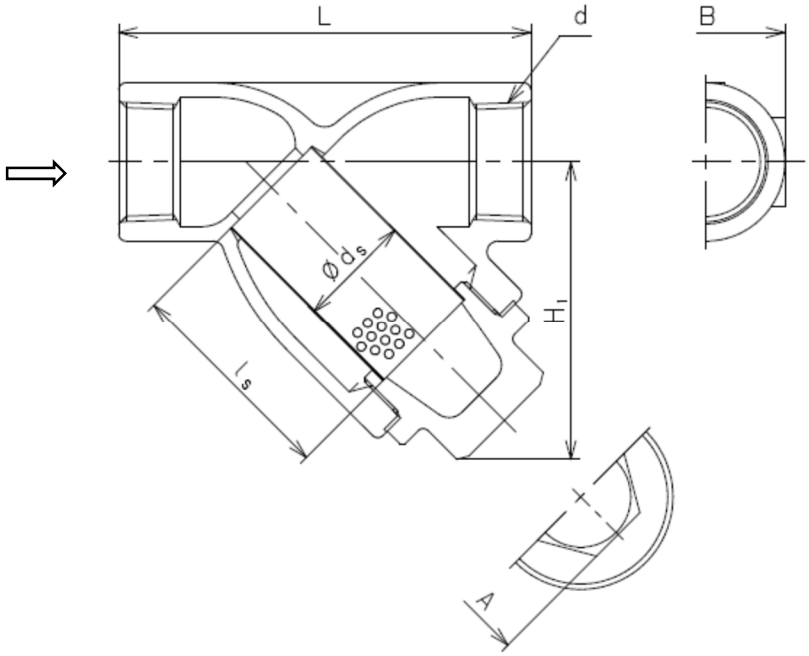

(mm)

Nominal size	d	L	H_1	A	B	ds	ls	Weight (kg)
15A	Rc 1/2	85	55	22	30	20	35	0.40
20A	Rc 3/4	100	69	27	38	25	50	0.68
25A	Rc 1	115	83	30	44	32	60	1.01
32A	Rc 1-1/4	135	92	36	54	40	70	1.48
40A	Rc 1-1/2	150	102	41	60	45	75	1.88
50A	Rc 2	180	117	46	75	56	90	3.34

3. Operation

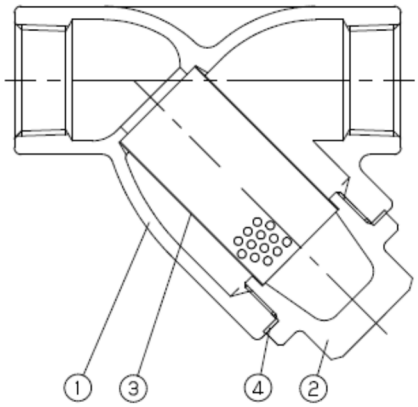

No.	Parts Name
1	Body
2	Cap
3	Screen
4	Gasket

Dust, scale, and other foreign substances which flow into the inlet side of the strainer are removed by the screen [3].

4. Nominal Size Selection

To make the best use of the strainer and satisfy the operating requirements to the maximum, take notice of the following.

4.1 Selection of nominal size

Select a strainer of the same nominal size as that of the pipe (nominal size of piping = nominal size of strainer). Note that using a strainer of a smaller nominal size increases the pressure loss of the strainer and may result in the pressure fallen below the specified level at the inlet side of the equipment.

4.2 Selection of nominal pipe size

When selecting an appropriate nominal pipe size, it is necessary to consider fluid type, maximum flow rate, permissible pressure loss, costs of piping and equipment, etc.
If the nominal pipe size is smaller, the costs of piping and equipment decreases while the pressure loss through the pipe increases to generate disturbances, possibly resulting in pipe wear, noise and/or vibration. If the nominal pipe size is too large, not only the costs of piping and equipment but also the thermal loss increases.
As a reference, the standard flow velocity is specified in the Japanese Industrial Standards (JIS) as a guide to select an appropriate nominal pipe size. See the following table.

<<Standard flow velocity>>

Fluid	Remarks	Standard flow velocity
Saturated steam	Auxiliary piping for vacuum or small-diameter piping	15 m/s [10-20]
	Large-diameter piping	30 m/s [20-40]
Superheated steam	Piping diameter: approx. Φ75 –Φ250	40 m/s [30-50]
	Piping of high-grade material	70 m/s [65-80]
Inlet of steam coil	0.3-0.7 MPa	30 m/s [25-30]
Air	Higher pressure: 1.0 MPa or more	20 m/s [20-25]
	Lower pressure	15 m/s [5-15]
	Extremely low pressure: 0.1 MPa or less	10 m/s [3-10]
Water, Oil	———	2 m/s [2- 4]

* The above table is based on the requirements in JIS F 7101 “Shipbuilding - Pipes of machinery - standard velocity of flow”.

4.3 Pressure Loss Chart

[Screen]

φ2.5 – 4P Mesh = 80 mesh

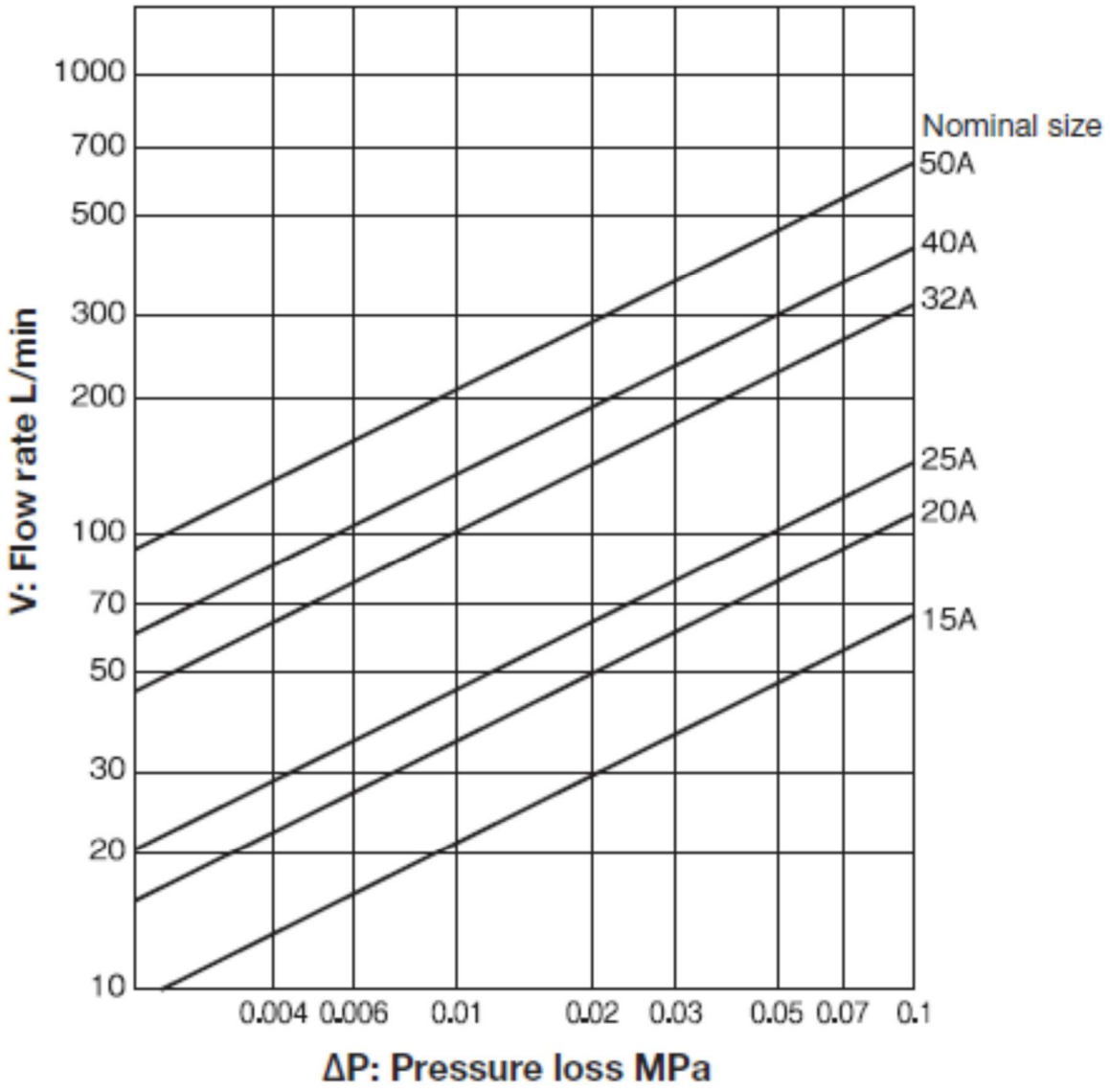

5. Maintenance

5.1 Precaution for installation

⚠ Caution

1. When installing, check the direction of the product so that the fluid flowing and the arrow marked on the product are in the same direction.
   * Setting the product in wrong directions prevents the product from performing as intended.
2. When installing, secure the space to remove the screen.
   * Failure to follow this notice hampers cleaning of the screen.
3. Do not apply excessive load, torque or vibration to the product.
   * Failure to follow this notice may result in fluid leakage.
4. Do not apply excessive load, torque or vibration to the product.
   * The foreign matter corresponding to the specified mesh size may not be completely caught constitutionally.

1. Clogging inside the product can be known from the differential pressure measured, when pressure gauges are installed in upstream and downstream of the product. [See Fig. 1 in “7. Piping Example.”]
2. The product shall be installed with its cap faced downward.
   * If drainage or similar problem occurs in a steam line, incline the product to the position at which the cap is kept horizontally.
3. If the product can only be installed to run the fluid from the bottom to the top, make sure to install a blow valve in order to remove the scale accumulated at the bottom of the riser pipe. [See Fig. 2 in “7. Piping Example.”]
4. When the fluid is steam, connect piping so that the cap faces sideways in order to minimize the pooling of drain. [See Fig. 3 in “7. Piping Example.”]

5.2 Precaution for operation

⚠ Warning

1. When the product is used for hot fluid, do not touch the product with bare hands.
   * Failure to follow this notice may result in scalds or injury.
2. Do not retighten the cap or cover after leading fluid into the product.
   * Failure to follow this notice may damage the gasket and cause outside leakage.
   * Failure to follow this notice may result in scalds or injury.

⚠ Caution

1. Use the product under a maximum pressure loss below 0.1 MPa. Periodically clean the screen.
   * Failure to follow this notice may damage the screen.

6. Disassembly, Cleaning and Reassembly

Excessive amount of foreign substances inside the product reduces filtration area and hampers fluid flow. If the product is kept for such condition, the screen is damaged and results in adverse effect on the piping system due to excessive pressure difference.

6.1 Precaution for disassembly and inspection

⚠ Warning
1. Completely discharge the pressure inside of the product, piping and equipment prior to disassembly and inspection. When fluid is hot, cool down the product. * Failure to follow this notice may result in scalds or injury due to the residual pressure.

1. After checking the pressure gauge to make certain there is no pressure inside the body [1], remove the cap [2] and screen [3]. Clean up the screen [3] by compressed air or water.

6.2 Precaution for reassembly

⚠ Caution
1. Clean the gasket contact surfaces of both the body and the cap. * Improper cleaning may cause fluid leakage at the gasket resulting in scalds or injury. 2. When installing caps and bolts, apply anti-galling agent to the threads. * If you do not apply anti-galling agent, you may not be able to remove the cap and bolt.

1. After cleaning the gasket contact surfaces of both the body [1] and the cap [2], attach a new gasket [4] to the cap [2], and then attach the cleaned screen [3] into the groove on the cap [2]. Install the assembly (cap [2], gasket [4], and screen [3]) to the body [1].

7. Piping Example

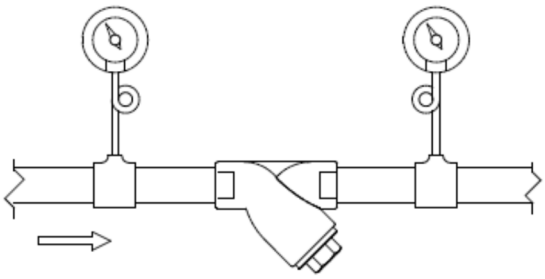

Fig. 1

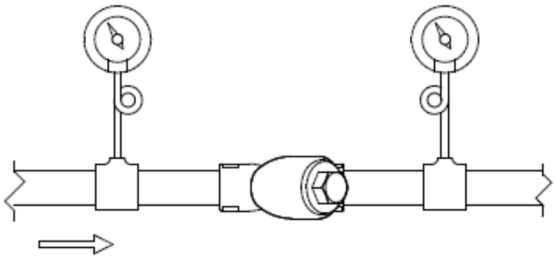

Fig. 3

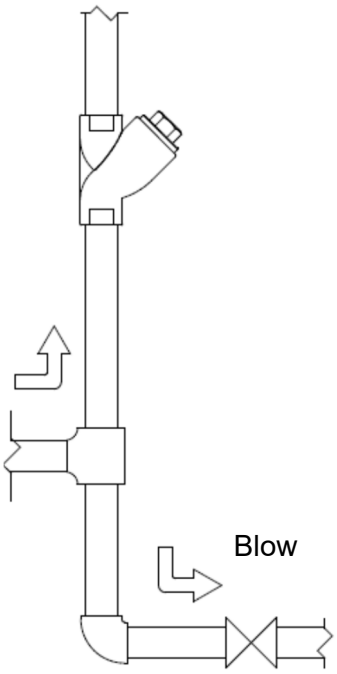

Fig. 2

Warranty Information

1. Limited warranty

   This product has been manufactured using highly-advanced techniques and subjected to strict quality control. Please be sure to use the product in accordance with instructions on the manual and the label attached to it.

   Yoshitake warrants the product to be free from any defects in material and workmanship under normal usage for a period of one year from the date of receipt by the original user, but no longer than 24 months from the date of shipment from Yoshitake's factory.

2. Parts supply after product discontinuation

   This product may be subject to discontinuation or change for improvement without any prior notice. After the discontinuation of the product, Yoshitake supplies the repair parts for 5 years otherwise individually agreed.

3. This warranty does not cover the damage due to any of below:

   (1) Valve seat leakage or malfunction caused by foreign substances inside piping.
   (2) Improper handling or misuse.
   (3) Improper supply conditions such as abnormal water pressure/quality.
   (4) Water scale or freezing.
   (5) Trouble with power/air supply.
   (6) Any alteration made by other than Yoshitake.
   (7) Use under severe conditions deviating from the design specifications (e.g. in case of corrosion due to outdoor use).
   (8) Fire, flood, earthquake, thunder and other natural disasters.
   (9) Consumable parts such as O-ring, gasket, diaphragm and etc.

   Yoshitake is not liable for any damage or loss caused by malfunction or defect of the product.

YOSHITAKE