Model TD-10NA
Model TD-30NA
STEAM TRAP

Instruction Manual

Please read this instruction manual thoroughly before using the steam trap, so that you may do so correctly and safely. Please carefully store this manual in a handy place.

——————The following safety symbols are used in this manual.——————

⚠Warning

This symbol indicates a potentially hazardous situation that, if not avoided, could result in death or serious injury.

⚠Caution

This symbol indicates a hazardous situation that, if not avoided, may result in minor or moderate injury. (“Caution” may also be used to indicate other unsafe practices or risks of property damage.)

Contents

YOSHITAKE

■EPDT-079d■

Steam trap is the important device for a heat control. A heat control can not be carried out without this device. It has a high performance and simple structure, and the maintenance is very easy. TD-10NA, TD-30NA steam trap is a disc type which has various excellent features; thus, it can be used in various ways, such as for a heating system, general industrial use, removing condensate in piping, and so forth.

1. Features

(1) Since the product uses a bimetal, it can remove any air trouble, and it also immediately discharges cold water and air which are generated when it starts up. Therefore, it can start up steam devices efficiently.
(2) Made of stainless steel with a special heat-treated disc and valve seat, providing excellent durability.
(3) Disc and valve seat can easily be replaced on the site without removing the body from the pipe.
(4) The movable part is just a singular disc, thus permitting easy maintenance with its simple structure.
(5) Though compact, lightweight and economical, the operating pressure range is considerably wide, calling for no adjustment.
(6) Any installation angles, horizontal, inclined or vertical are available, permitting easy piping.
(7) The trap is kept warm with insulation cover, which safeguards it from malfunction or steam leakage.
(8) Strainer is built-in the steam trap.
(9) Even with its compact size, it features a large discharge capacity.

2. Specifications

Model	Connection	Operating pressure	Application	Max. temperature	Materials	
					Body	Disc, Valve seat
TD-10NA	JIS Rc or NPT	0.035～2.0MPa	Condensate	220℃	FCD450	Stainless steel
TD-30NA	JIS 20KFF					
	JIS 10KFF	0.035～1.0MPa				

※ Permissible back pressure: Less than 50% of inlet pressure.
※ Standard screen: 60 mesh.

⚠ Caution

(1) Please confirm that the indications on the product name plate coincide with the specifications of the ordered product model before usage.
※ In case they do not coincide, do not use the product and contact us.

3. Dimensions and Weights

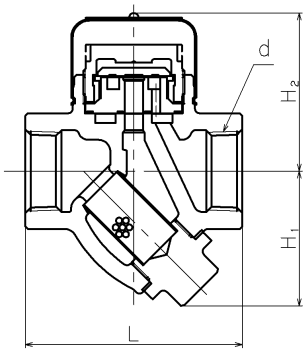

・TD-10NA

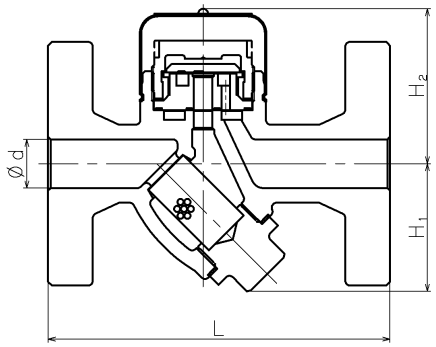

・TD-30NA

・TD-10NA (mm)

Size	d	L	H_1	H_2	Weight (kg)
15A	Rc 1/2 or NPT 1/2	90	49	55.5	0.9
20A	Rc 3/4 or NPT 3/4	90	53	60.5	1.2
25A	Rc 1 or NPT 1	90	56	62.5	1.4

・TD-30NA (mm)

Size	Flange	d	L	H_1	H_2	Weight (kg)
15A	JIS 10KFF JIS 20KFF	15	125	51	59	2.3
20A		20	140	54	63	3.4
25A		25	150	65	63	4.1

※ Flange thickness for JIS 10KFF model is same as JIS 20KFF.

4. Operation

(1) Beginning of the operation

At the beginning of the operation, the bimetal is still cool. Thus, the disc is lifted up by the bimetal and ring.

The air and condensate, which are inflowing from the inlet side, are smoothly discharged to the outlet side; thus, there is no air trouble to be worried.

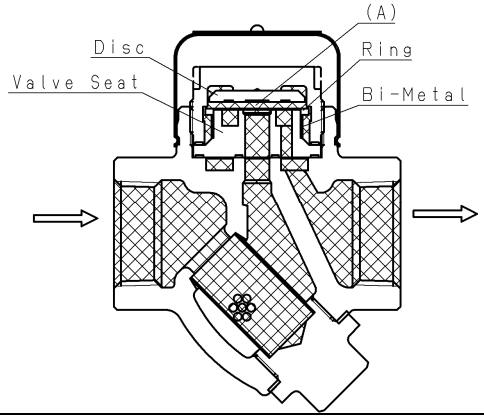

(2) Valve closing operation

When steam inflow, the bimetal is heated up and it is expanded and widely opened. Then, it slips down the slope of the valve seat, and the ring comes lower than the seating surface of the valve seat. When the condensate temperature becomes almost equal to the saturated steam temperature, the condensate passing through the bottom (A) of the disc becomes re-evaporating jet. Because of this, a low-pressure section is generated at section (A).

Furthermore, a part of the jet enters the control chamber and increases the pressure inside the chamber. As a result, the disc is pushed down and makes the valve closed.

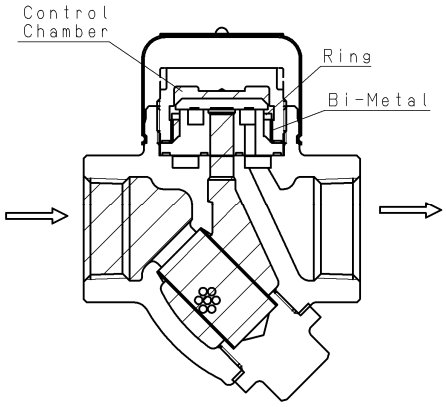

(3) Condensate inflow

When condensate inflows, the temperature drops, and the steam inside the control chamber is condensed. Then, the pressure inside the chamber becomes low.

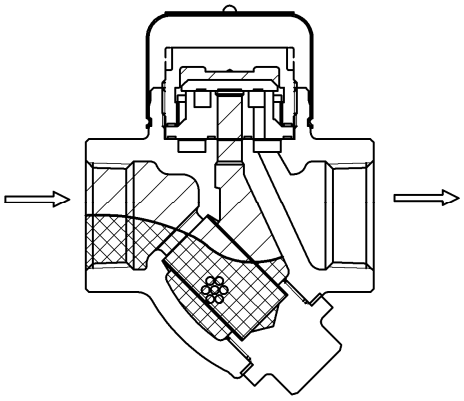

(4) Valve opening operation

When the pushing-down force becomes less than the pushing-up force from the jetting-out port at the top of the valve seat, the disc is opened, and condensate is discharged.

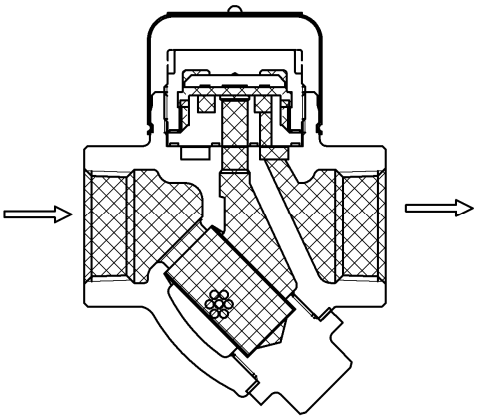

*After this stage, (2), (3) and (4) is continuously repeated.

Condensate　Steam

5. Selection of Nominal Size

(1) Select the trap which shows the safety factor 4～5 for an actual use. That is, when discharge capacity of 100 kg/h is needed, it is economical to use the trap which has the performance of 400～500 kg/h.

(2) You must consider back pressure in order to select the discharge capacity because the trap discharge condensate according to a difference (operating differential pressure) between the inlet pressure and the outlet pressure (back pressure). For example, when the inlet pressure is 1.0MPa and the outlet pressure is 0.2MPa, these are the discharge capacity for operating differential pressure of 0.8MPa.

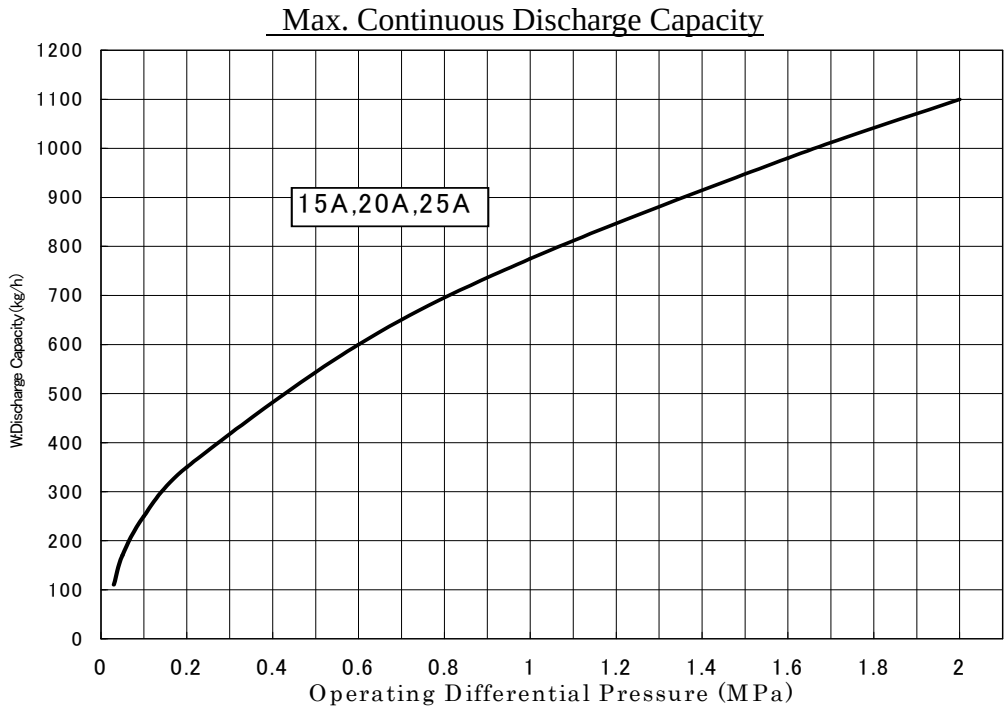

6. Installation

6.1 Warning and Caution for Installation

⚠ Warning

(1) Plumb in the piping of the outlet side to the safe place where blowing steam condensate can not affect.
※It is dangerous if fluid blows out.

⚠ Caution

(1) Remove foreign matter and scales from the lines before connecting the valve.
※ Failure to do so may prevent the valve from functioning correctly.
※ Be sure not to make sealing agent or seal tape go into pipe.

(2) When installing, confirm if the direction of fluid flow matches with inlet and outlet port of the product respectively.
※ If installed in opposite direction, it will not function as designed.

(3) Carry out the securing of pipes and the product properly.
※ If exert excessive stress to the valve, it may result in malfunction.

(4) Do not disassemble the trap unreasonably.
※ Disassembling the trap at your discretion may affect the original performance.

(5) When installing, secure the space for the maintenance and checking (cleaning of the screen).
※ It is needed to carry out the maintenance and inspection (cleaning of the screen).

(mm)

	X	Y	Z
TD-10NA	90	90	70
TD-30NA			

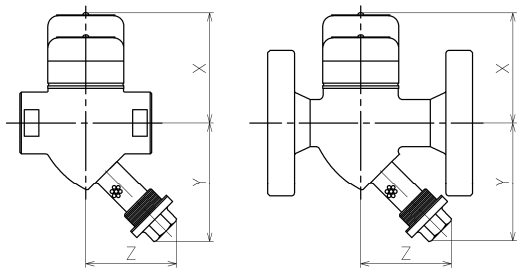

TD-10NA TD-30NA

(6) Carry out the connection with pipes properly.
※ Improper piping connection may cause the leakage of fluid.

(7) Do not use a quick-operating valve in front and behind of trap not to produce water hammer.
※ Trap can be damaged.

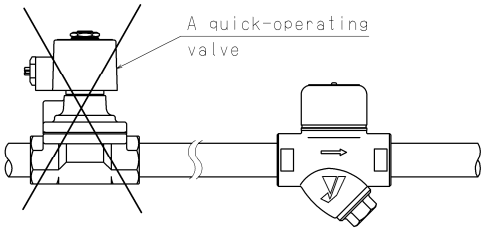

(8) Install a trap lower position as possible to collect condensate. And keep piping slope.

(9) Do not insulate the product.

(10) When installing a trap on main pipe of steam, prepare drip leg before the trap.

(11) Install a trap where atmosphere temperature is lower than discharging condensate has.

(12) By-pass line provided in parallel to the trap can give such advantages as follows.

- By opening the by-pass valve, large volume of condensate and air on start up can be quickly discharged.
- Newly installed piping can be blown off easily by closing the valves on the inlet and outlet sides and by opining the by-pass valve.
- Inspection of a trap and replacement of parts can be done without stopping the line operation.

6.2 Example of piping

Description	Correct	Incorrect
When installing by-pass line, prepare stop valve to the outlet side of a trap.	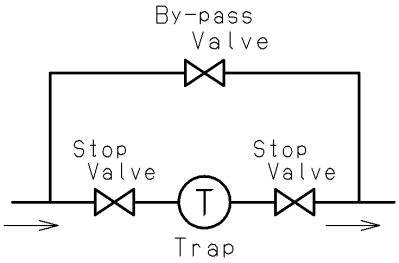	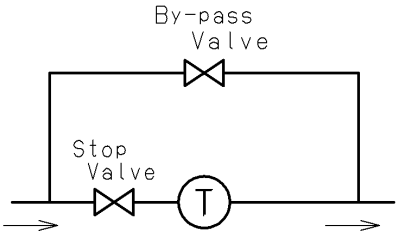
Steam trapping near a regulating valve shall be provided to the inlet side.	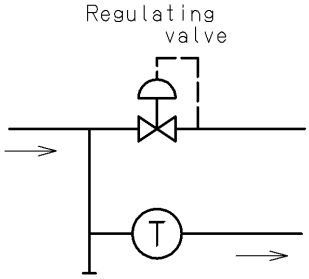	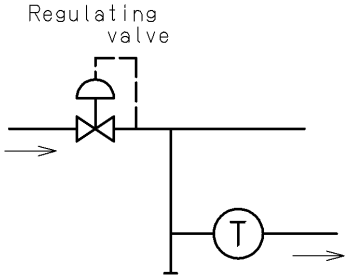

Description	Correct	Incorrect
Condensate from the steam main shall be taken out from the bottom.	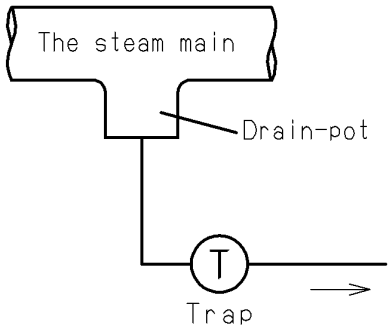	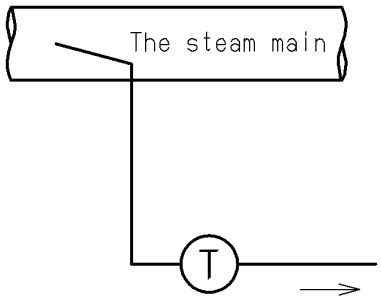
Trap shall be positioned at the bottom of condensate producing device.	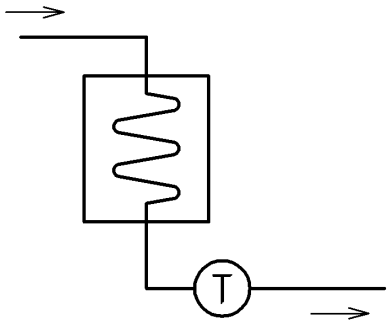	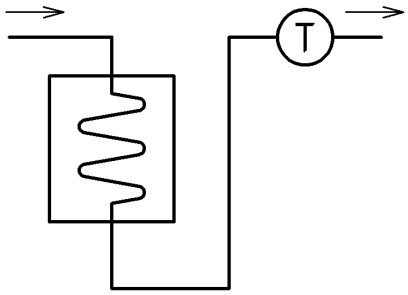
Condensate from every device shall be trapped independently.	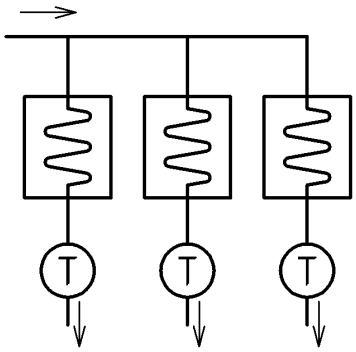	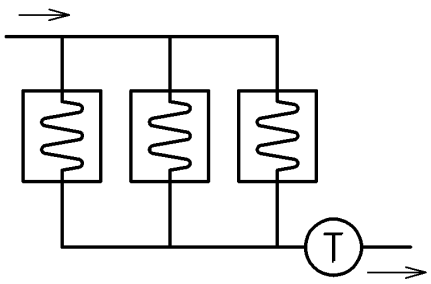
The inlet and outlet piping shall be the same nominal size as a nominal size of the trap.	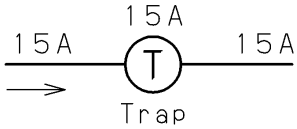	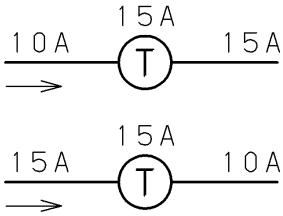 ※If there is a difference between the nominal size of the trap and piping, inlet pressure drops, or back pressure rises.

Description	Correct	Incorrect
The size of collecting condensate pipe should be larger than the sum area of each discharge pipe. And install check valves for prevention of back flow.	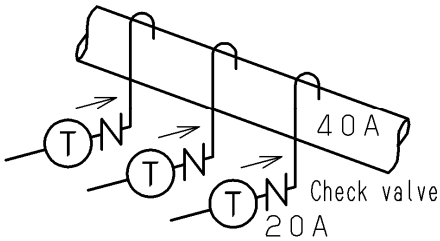	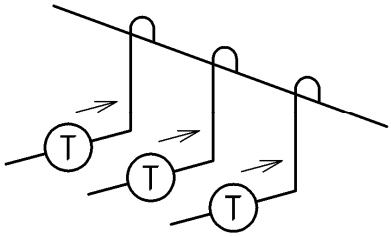
For condensate recovery, connect condensate pipe to the top of return pipe. Install individual return pipe for each pressure. And install check valves for prevention of back flow.	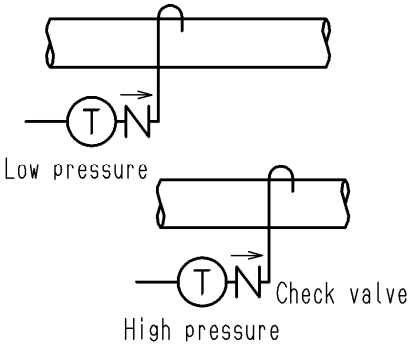	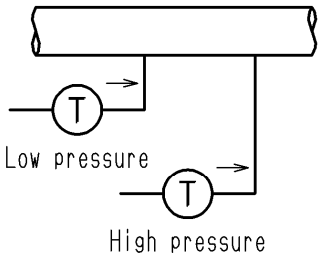 ※Flash steam out from the high pressure line increases back pressure of the trap on the low pressure line.
End of trap discharge pipe shall be positioned above the water level in the pit.	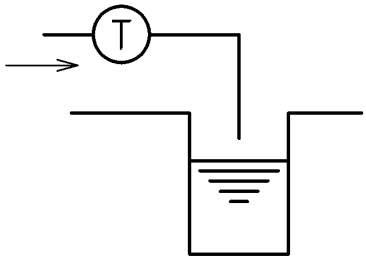	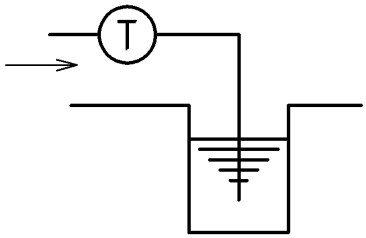 ※While stopping the trap may suction dirty water in the pit, which may lead to malfunction.

7. Operating Procedure

7.1 Warning and Caution for Operation

⚠Warning

(1) Before flow the steam in pipe line, make sure steam can flow without any dangerous at the end of pipe line.
※In case steam blow off, it may result in burns.

(2) When confirming product's operation, do not stand in front of outlet. Large amount of condensate may be discharged at the first steam flow.
※Blowing out of condensate can burn or injure you.
Do not tighten the cap after flowing the fluids to the valve.

(3) Please do not tighten the cap.
※The gasket will be broken and leads to have a leakage.

8. Maintenance Procedure

8.1 Warning and Caution for Maintenance

⚠ Warning

(1) Do not touch the trap directly with bare hands.
※ Doing so may result in burns.
(2) Trap shall be disassembled and inspected by qualified person or manufacture.
※ Request the maintenance to specialized dealer or manufacture in case of any problems.
(3) Remove all internal pressure of the product, piping, and equipment before disassembly and inspection. And cool down the product.
※ Residual pressure in the product or piping can result in burns.

⚠ Caution

(1) Inspect a product daily.
※ It is needed to maintain the original performance.

Daily inspection

Item	Inspecting way	Troubleshooting	
Discharge of condensate	Visual inspection	(1)No condensate discharge	Refer to 8.2 Troubleshooting.
		(2) Poor condensate discharge	
		(3)Continuous discharge of condensate or steam.	
Leakage to outside	Visual inspection	Refer to 8.2 Troubleshooting.	

(2) In case of no operation for a long period, perform operating examination before start operation again.
※ Failure to do so may malfunction by rust in the products and piping.
(3) Put a container under the products at disassembly since condensate may flow out.
※ In case of no container for condensate, it makes dirty surrounding of the trap.
(4) Take care not to fall parts down during the disassembly. Use soft cloth; put disassembled parts on it not to make scratches them.
※ Failure to do so, original performance may be affected.
(5) Secure tight assembly of all parts.
※ Failure to do so may malfunction or leakage to outside.
(6) When repair the product, proper parts must be used. And do not alter product.
※ Using the improper parts and alternation of the product may be result on injury or burns by breakage of product, blowing out of steam or condensate, or malfunction.
(7) Replace gaskets with new ones when reassembling.
※ The gasket is consumable parts. Reuse of gaskets may cause steam leakage problem.

(8) With leakage problem such as continuous blowing out of condensate by existence foreign matters between valve and valve seat, contact us or our agent since disassemble, repair or replace of parts may be needed.
(This leakage problem by the customer using is not under our warranty.)

8.2 Troubleshooting

Problem	Cause	Solution
Condensate is not Discharged.	1. Blockage in a discharge hole of valve seat②.	1. Disassemble and clean it.
	2. Screen⑧ is clogging.	2. Disassemble and clean it.
	3. Breakage as a result of abnormal pressure rising such as freezing or water hammer.	3. Replace the trap.
Improper discharge.	1. Operating differential pressure of the trap is not high enough.	1. Examine the inlet/outlet pressure of the trap.
	2. The screen⑧ is clogging.	2. Disassemble and clean it.

Problem	Cause	Solution
Improper discharge.	3. There may be a tendency of steam locking.	3. Examine the piping system.
Continuous blow-out.	1. Foreign matter stuck to disc③ and valve seat②. 2. Scratches or wear on the disc③ or valve seat②. 3. Exceeding over the permissible back pressure. 4. The pressure on use is less than the minimum operating pressure.	1. Disassemble and clean it. 2. Replace the parts. 3. Examine the piping system. 4. Replace with an appropriate trap.
Steam leakage.	1. There is a leakage between the body① and disc cover④, or a leakage between the body① and cap⑨. 2. Breakage as a result of abnormal pressure rising such as freezing or water hammer.	1. If the gasket⑩ is damaged, replace it with a new one. If it is not, try to tighten the disc cover④ or cap⑨. 2. Replace the trap.
Un-discharging operation.	1. Scratches or wear on the disc③ or valve seat②. 2. Foreign matter stuck or oil film on the disc③ and valve seat②.	1. Replace the parts. 2. Disassemble and clean it.

※ Refer to "8.4 Disassembly Drawing" about the name of parts mentioned above.
※ Contact us or our agent if necessity of parts replacement is in doubt.

8.3 Disassembly and Assembly Procedure

To disassemble the product, follow the procedure below while referring to "8.4. Disassembly Drawing"

(1) Disassembling the disc③and valve seat②

1. Lift up the heating cover⑦, while holding it from both sides. Then, the cover will come off.
2. Loosen the screws on the disc cover④with a wrench (nominal size :36mm), and remove the disc cover and internal parts.

(2) Disassembling the strainer

1. Loosen the screws on the cap⑨with a wrench (nominal size : 15A=19mm, 20A and 25 A =22mm) and remove the cap, gasket⑩ and screen⑧.

(3) Assembly

1. Assemble in the reverse order of disassembly procedure above mentioned and replace gaskets with new ones.
   ※ Take care the disc has a direction. If the direction is upside down, steam or condensate must be continuously discharged.

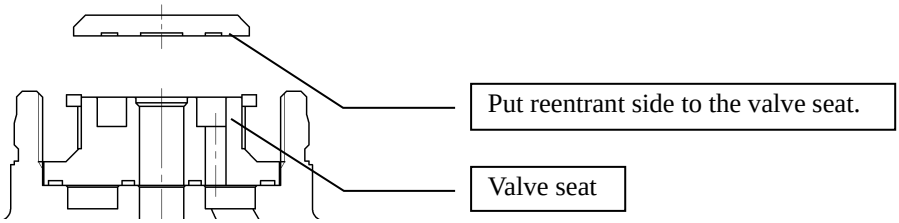

8.4 Disassembly Drawing (TD-10NA)

・The connection of the body for TD-30NA differs.

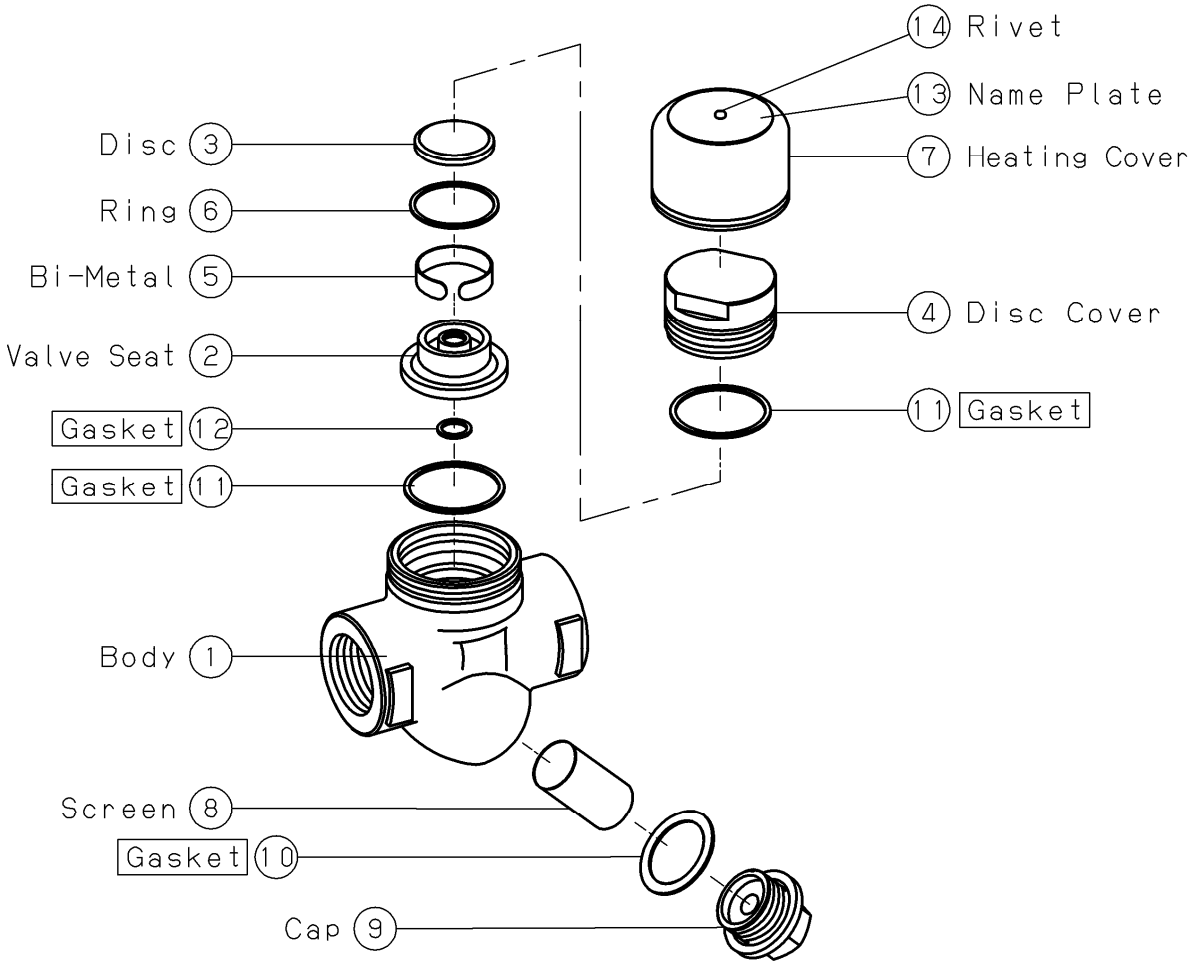

Part names shown in boxes are consumable items.

9. Disposal

When dispose the products, we recommend each parts is disposed after checking what the material is.
Please refer to “8.3 Disassembly and Assembly Procedure” to separate parts.